Shenzhen Mosrac Motor Co.,

2025 Product Selection Manual

Professional planetary joint module

Domestic Station

international Station

ShenZhen Mosrac Motor Co., Ltd

Sales Line：86-18924671145

Technical Support：86-18675590097

Mail： Sales15@mosrac.com

Website：https://www.mosrac.com

Address: Building B7, Block B, Zhangtou Road, Songgang Street, Bao'an District, Shenzhen, Guangdong, China

Catalog

module Selection Table 3

Product Features 4

module model naming rules 5

joint module

A3507-2EC 6

A3507-2EC（48V） 7

A4310-2EC V1.1 8

A4310-2EC V1.1（48V） 9

A4340-2EC 10

A4340-2EC（48V） 11

A4340P-2EC 12

A4340P-2EC（48V） 13

A6006-2EC 14

A6248P-2EC 15

A8006-2EC V1.1 16

A8009-2EC 17

A8009P-2EC 18

A10010-2EC 19

A10010L-2EC 20

joint module Selection Table

Model	module Model	Rated Torque (Nm)	Peak Torque (Nm)	No-load speed (rpm)	Rated Speed (rpm)	Reduction Ratio	Motor size (mm)	Weight (g)	Rated Power (W)
joint module	A3507-2EC	0.8	3	460	150	7	46*37.9	About 150	12
	A3507-2EC(48V)	0.8	3	900	150	7	46*37.9	About 150	12
	A4310-2EC V1.1	3	7	200	120	10	57*46	About 300	37
	A4310-2EC V1.1 (48V)	3	7	400	120	10	57*46	About 300	37
	A4340-2EC	9	27	52.5	36	40	57*53.3	About 362	33
	A4340-2EC (48V)	9	27	100	36	40	57*53.3	About 362	33
	A4340P-2EC	9	27	52.5	36	40	57*56.5	About 375	33
	A4340P-2EC (48V)	9	27	100	36	40	57*56.5	About 375	33
	A6006-2EC	4	11	226@24V 408@48V	150	6	76*36.5	About 335	62
	A6248P-2EC	30	97	60	40	48	76*62.5	About 628	125
	A8006-2EC V1.1	8	20	194.2@24V 392.8@48V	120	6	96*40	About 559	100
	A8009-2EC	20	40	168@24V 335@48V	100@24V 200@48V	9	98*61.7	About 896	209
	A8009P-2EC	20	40	168@24V 335@48V	100@24V 200@48V	9	98*61.7	About 921	209
	A10010-2EC	40	150	75@24V 150@48V	50@24V 100@48V	10	112*62 (Maximum Overall Dimensions 120)	About 1485	418
	A10010L-2EC	40	120	100@24V 200@48V	70@24V 100@48V	10	120*53 Height without positioning pins	About 1375	418

Product Features

Feature Description

Pole pair identification

Automatically identify and configure the number of pole pairs for easy debugging

Line sequence adaptation

Automatically identify phase lines to ensure safe debugging and avoid the risk of motor burnout due to incorrect connection and debugging.

One-click identification of motor parameters

Automatically identify phase resistance, phase inductance, flux linkage, and moment of inertia motor parameters, and automatically adjust controller parameters.

Dual temperature protection

Motor + drive dual temperature protection design, safer!

Load Adaptation

It senses the load and automatically adjusts controller parameters to maintain optimal equipment operation.

Control Mode

❖ MIT Model

The MIT mode is designed to be compatible with the original MIT mode. It allows for seamless switching while also allowing for flexible control range settings (P_MAX, V_MAX, T_MAX). The ESC converts received CAN data into control variables, calculating the torque value as the current reference for the current loop. The current loop ultimately achieves the desired torque and current according to its regulation rules. The control block diagram is as follows:

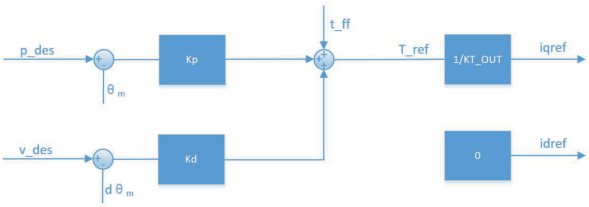

❖ Position speed mode

The position-speed mode adopts a three-loop series control mode. The position loop is the outermost loop, and its output is used as the given value of the speed loop. The output of the speed loop is used as the given value of the inner current loop to control the actual current output. The control schematic diagram is shown in the figure below:

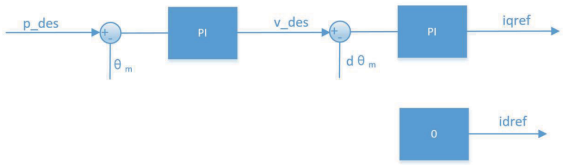

❖ Speed Mode

The speed mode allows the motor to run stably at the set speed. The control diagram is as follows:

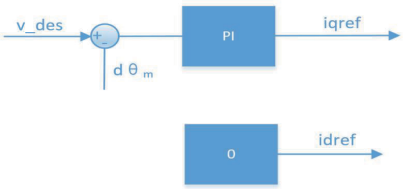

❖ Force-position mixed control mode

The force-position mixed control mode dynamically controls the output torque based on the position-speed mode control. Its control block diagram is as follows:

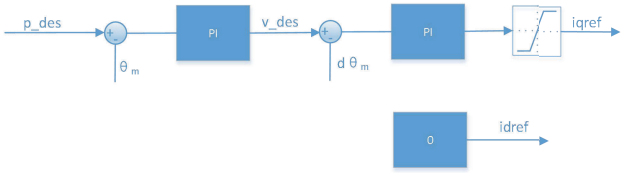

joint module model naming rules

joint module

A 43 40 X -2EC VX.X (48V)

Product Series

A: joint module Series

Stator outer diameter

35、43、60、62、80、100(mm)

Gear Ratio

06、07、09、10、19、40、48

Output bearing and versions

X represents letters such as L, P, etc. Default: Deep Groove Ball Bearing

P: Cross Roller Bearing

L: Lite version, not representing bearing type

Encoder

Default: Single encoder

1EC: Single encoder, CAN communication

2EC: Dual encoders (single-turn absolute position on output shaft), CAN communication

1EE : Single encoder, EtherCAT communication 2EE: Dual encoders (single-turn absolute position on output shaft), EtherCAT communication

module Version

V1.0: Version 1.0, default

VX.X: X represents 0-9, indicating the module upgrade version

Driver Rated Voltage

Default: 24V Driver

48V: 48V Driver

joint module A3507-2EC

module parameters	
供电电压 Supply Voltage(V)	24
额定相电流 Rated Phase Current(A)	3
峰值相电流Peak Phase Current(A)	8.3
额定扭矩 Rated Torque(Nm)	0.8
峰值扭矩 Peak Torque(Nm)	3
额定转速 Rated Speed(rpm)	150
空载转速 No-load Speed(rpm)	460
额定功率Rated Power(W)	12
减速比 Reduction Ratio	7
极对数 Pair of Poles	14
相间电感 Interphase inductance(uH)	235
相间电阻 Interphase resistance(Ω)	0.8
尺寸 直径*高度 Motor Size（mm）	46*37.9
重量 Weight（g）	150
编码器 Encoder	Magnetic Encoder / Dual Encoder
通信方式 Communication Mode)	CAN、CANFD

Dimensional Drawing

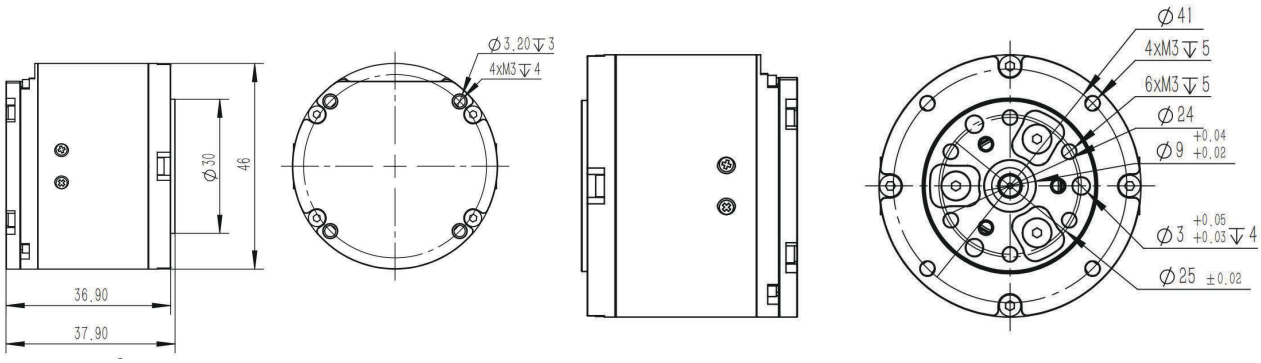

Performance curve

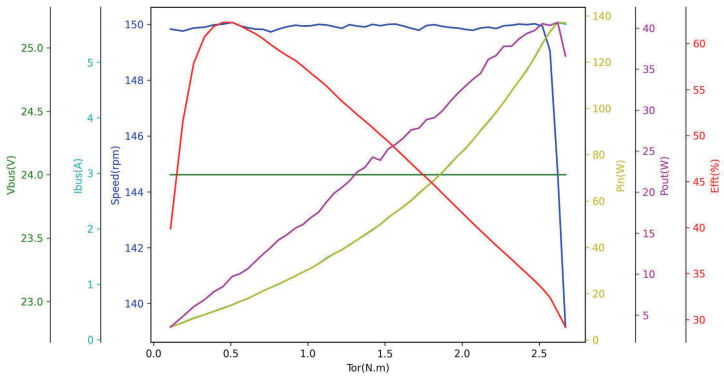

joint module A3507-2EC （48V）

module parameters	
供电电压 Supply Voltage(V)	24-48
额定相电流 Rated Phase Current(A)	3
峰值相电流Peak Phase Current(A)	8.3
额定扭矩 Rated Torque(Nm)	0.8
峰值扭矩 Peak Torque(Nm)	3
额定转速 Rated Speed(rpm)	150
空载转速 No-load Speed(rpm)	900
额定功率Rated Power(W)	12
减速比 Reduction Ratio	7
极对数 Pair of Poles	14
相间电感 Interphase inductance(uH)	235
相间电阻 Interphase resistance(Ω)	0.8
尺寸 直径*高度 Motor Size（mm）	46*37.9
重量 Weight（g）	150
编码器 Encoder	Magnetic Encoder / Dual Encoder
通信方式 Communication Mode)	CAN、CANFD

Dimensional Drawing

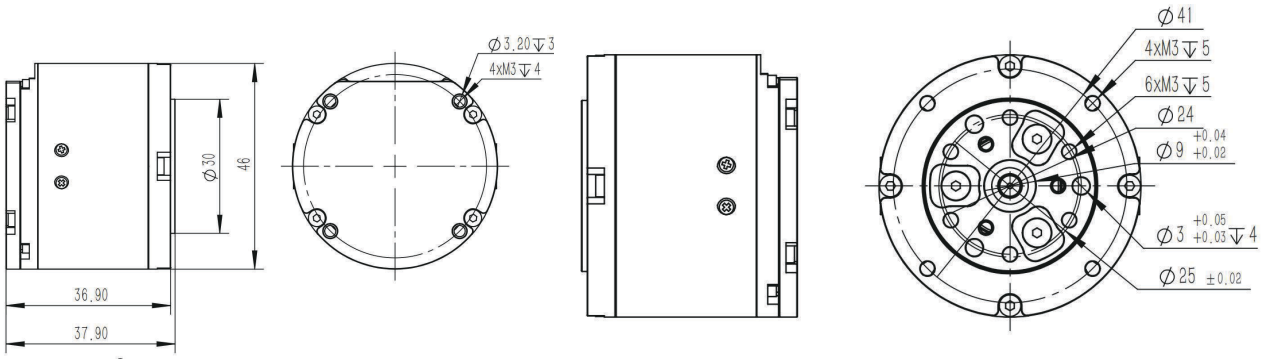

Performance curve

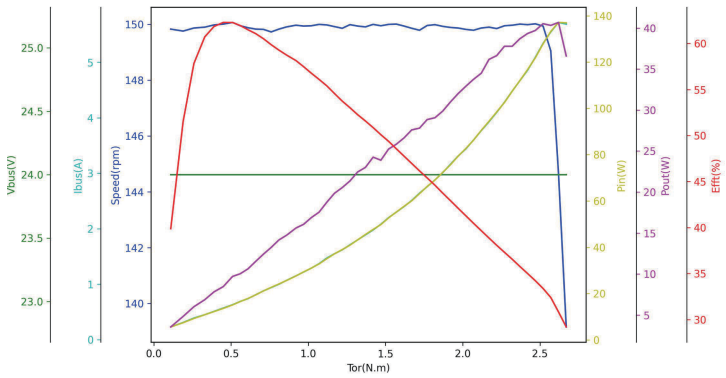

joint module A4310-2EC V1.1

module parameters	
供电电压 Supply Voltage(V)	24
额定相电流 Rated Phase Current(A)	3.7
峰值相电流Peak Phase Current(A)	7.2
额定扭矩 Rated Torque(Nm)	3
峰值扭矩 Peak Torque(Nm)	7
额定转速 Rated Speed(rpm)	120
空载转速 No-load Speed(rpm)	200
额定功率Rated Power(W)	37
减速比 Reduction Ratio	10
极对数 Pair of Poles	14
相间电感 Interphase inductance(uH)	345
相间电阻 Interphase resistance(Ω)	0.85
尺寸 直径*高度 Motor Size（mm）	57*46
重量 Weight（g）	300
编码器 Encoder	Magnetic Encoder / Dual Encoder
通信方式 Communication Mode)	CAN、CANFD

Dimensional Drawing

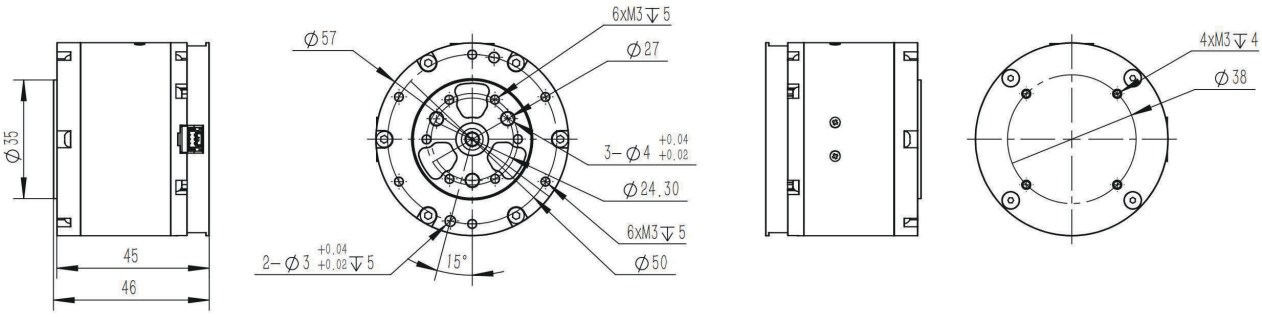

Performance curve

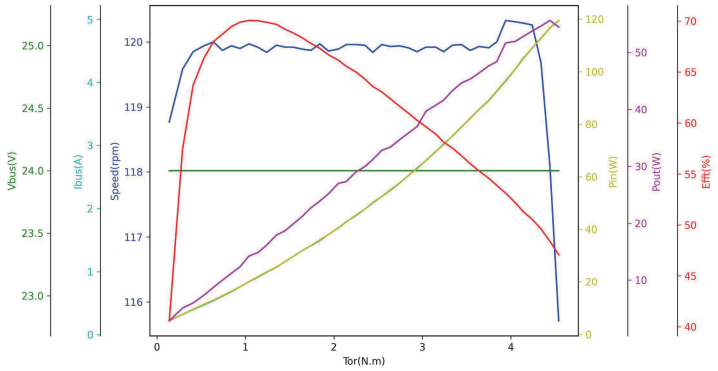

joint module A4310-2EC V1.1（48V）

module parameters	
供电电压 Supply Voltage(V)	24-48
额定相电流 Rated Phase Current(A)	3.7
峰值相电流Peak Phase Current(A)	7.2
额定扭矩 Rated Torque(Nm)	3
峰值扭矩 Peak Torque(Nm)	7
额定转速 Rated Speed(rpm)	120
空载转速 No-load Speed(rpm)	400
额定功率Rated Power(W)	37
减速比 Reduction Ratio	10
极对数 Pair of Poles	14
相间电感 Interphase inductance(uH)	345
相间电阻 Interphase resistance(Ω)	0.85
尺寸 直径*高度 Motor Size（mm）	57*46
重量 Weight（g）	300
编码器 Encoder	Magnetic Encoder / Dual Encoder
通信方式 Communication Mode)	CAN、CANFD

Dimensional Drawing

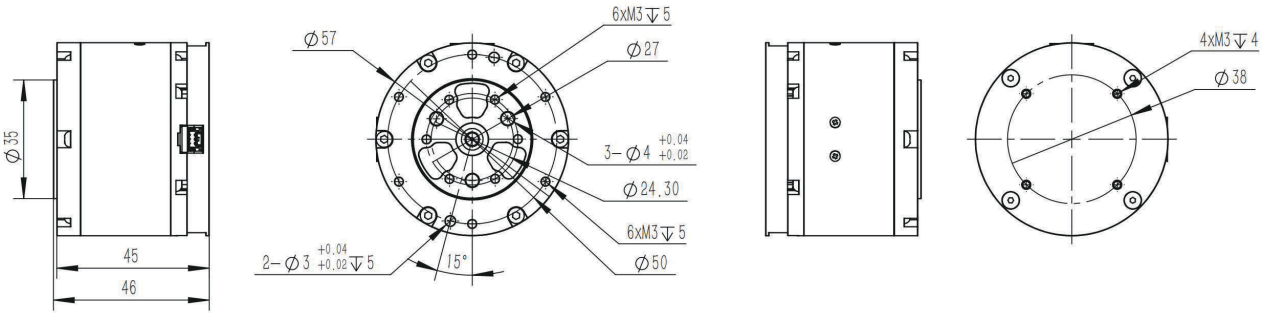

Performance curve

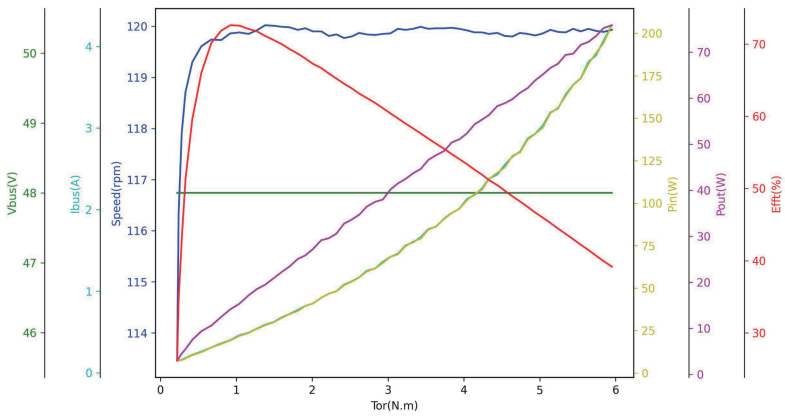

joint module A4340-2EC

module parameters	
供电电压 Supply Voltage(V)	24
额定相电流 Rated Phase Current(A)	3
峰值相电流Peak Phase Current(A)	8
额定扭矩 Rated Torque(Nm)	9
峰值扭矩 Peak Torque(Nm)	27
额定转速 Rated Speed(rpm)	36
空载转速 No-load Speed(rpm)	52.5
额定功率Rated Power(W)	33
减速比 Reduction Ratio	40
极对数 Pair of Poles	14
相间电感 Interphase inductance(uH)	360
相间电阻 Interphase resistance(Ω)	0.88
尺寸 直径*高度 Motor Size（mm）	57*53.3
重量 Weight（g）	362
编码器 Encoder	Magnetic Encoder / Dual Encoder
通信方式 Communication Mode)	CAN、CANFD

Dimensional Drawing

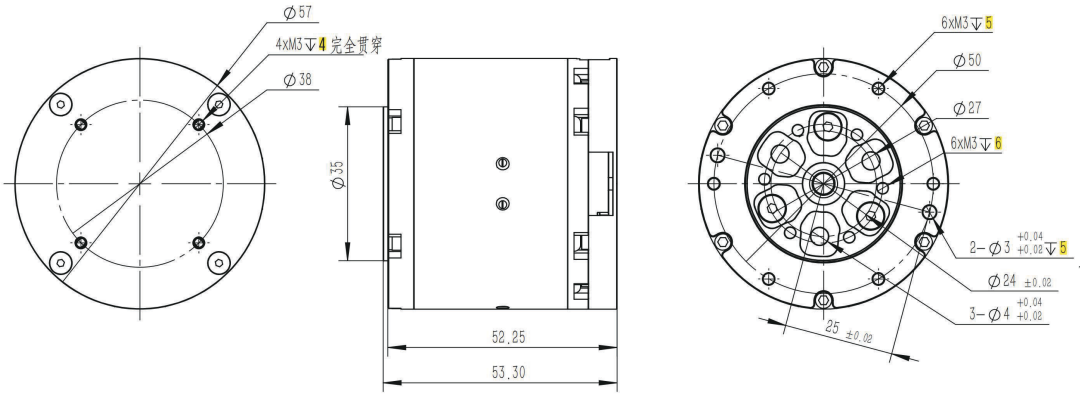

Performance curve

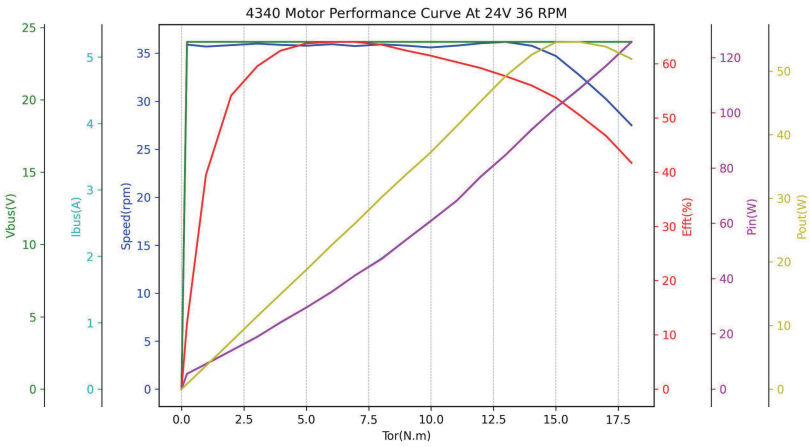

joint module A4340-2EC（48V）

module parameters	
供电电压 Supply Voltage(V)	24-48
额定相电流 Rated Phase Current(A)	2.5
峰值相电流Peak Phase Current(A)	9
额定扭矩 Rated Torque(Nm)	9
峰值扭矩 Peak Torque(Nm)	27
额定转速 Rated Speed(rpm)	36
空载转速 No-load Speed(rpm)	100
额定功率Rated Power(W)	33
减速比 Reduction Ratio	40
极对数 Pair of Poles	14
相间电感 Interphase inductance(uH)	360
相间电阻 Interphase resistance(Ω)	0.88
尺寸 直径*高度 Motor Size（mm）	57*53.3
重量 Weight（g）	362
编码器 Encoder	Magnetic Encoder / Dual Encoder
通信方式 Communication Mode)	CAN、CANFD

Dimensional Drawing

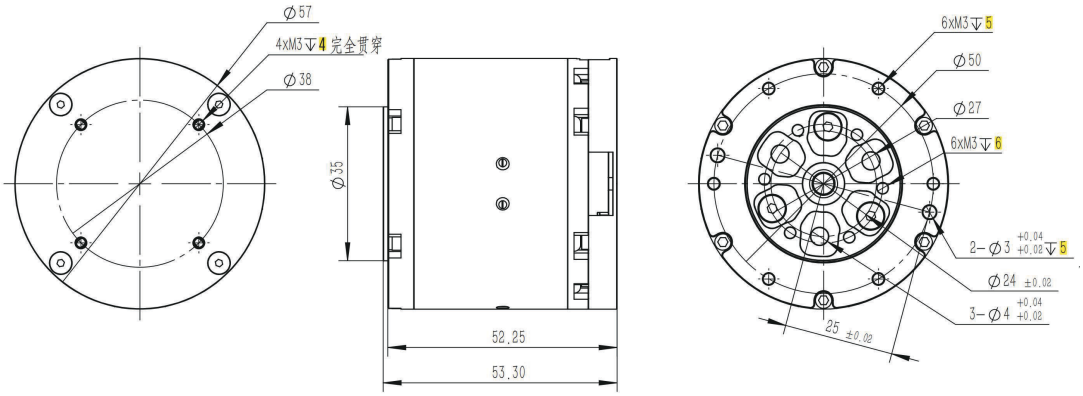

Performance curve

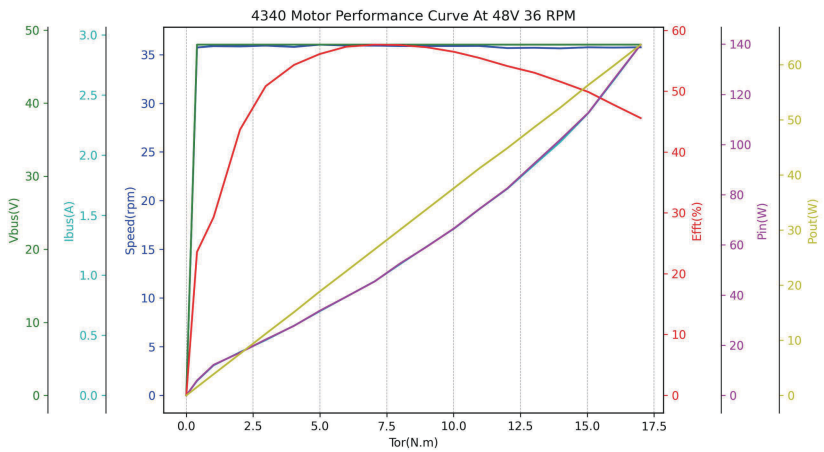

joint module A4340P-2EC

module parameters	
供电电压 Supply Voltage(V)	24
额定相电流 Rated Phase Current(A)	3
峰值相电流Peak Phase Current(A)	8
额定扭矩 Rated Torque(Nm)	9
峰值扭矩 Peak Torque(Nm)	27
额定转速 Rated Speed(rpm)	36
空载转速 No-load Speed(rpm)	52.5
额定功率Rated Power(W)	33
减速比 Reduction Ratio	40
极对数 Pair of Poles	14
相间电感 Interphase inductance(uH)	360
相间电阻 Interphase resistance(Ω)	0.88
尺寸 直径*高度 Motor Size（mm）	57*56.5
重量 Weight（g）	375
编码器 Encoder	Magnetic Encoder / Dual Encoder
通信方式 Communication Mode)	CAN、CANFD

Dimensional Drawing

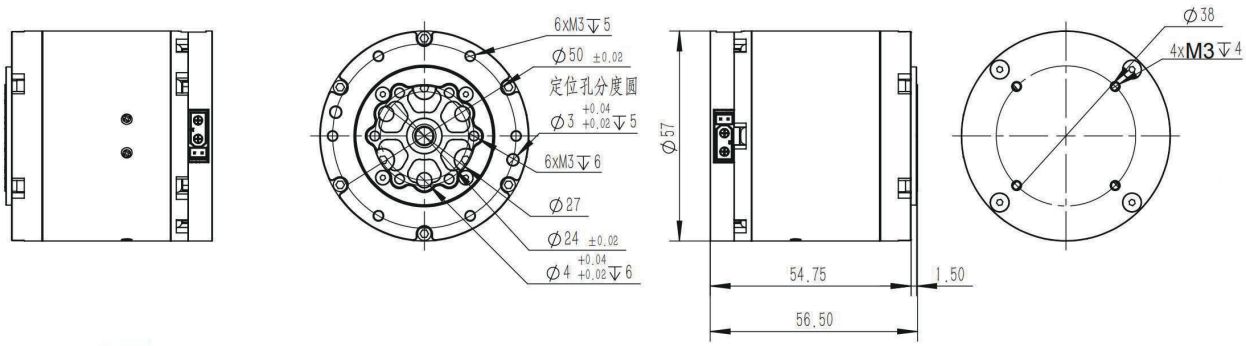

Performance curve

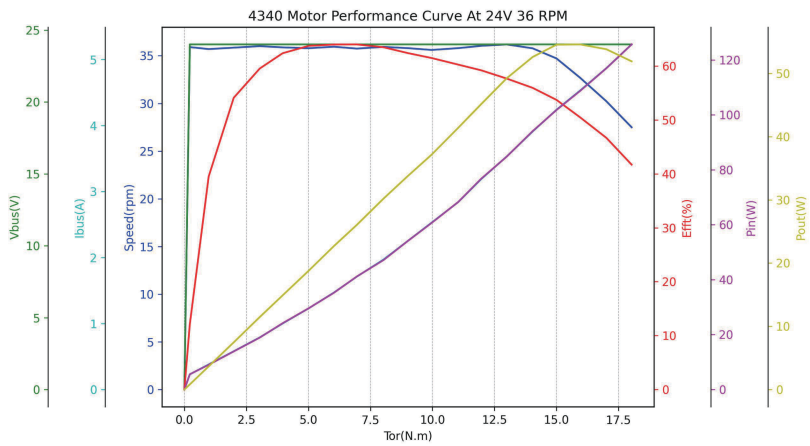

joint module　A4340P-2EC（48V）

module parameters	
供电电压 Supply Voltage(V)	24-48
额定相电流 Rated Phase Current(A)	2.5
峰值相电流Peak Phase Current(A)	9
额定扭矩 Rated Torque(Nm)	9
峰值扭矩 Peak Torque(Nm)	27
额定转速 Rated Speed(rpm)	36
空载转速 No-load Speed(rpm)	100
额定功率Rated Power(W)	33
减速比 Reduction Ratio	40
极对数 Pair of Poles	14
相间电感 Interphase inductance(uH)	360
相间电阻 Interphase resistance(Ω)	0.88
尺寸 直径*高度 Motor Size（mm）	57*56.5
重量 Weight（g）	375
编码器 Encoder	Magnetic Encoder / Dual Encoder
通信方式 Communication Mode)	CAN、CANFD

Dimensional Drawing

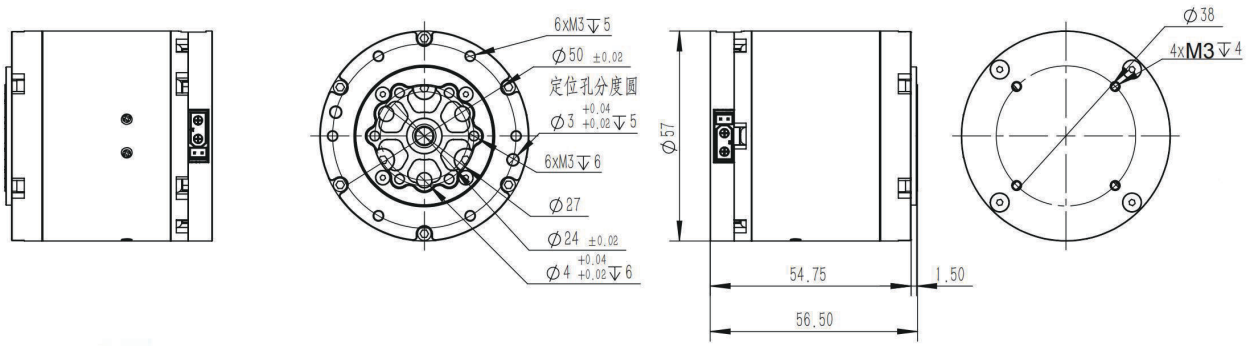

Performance curve

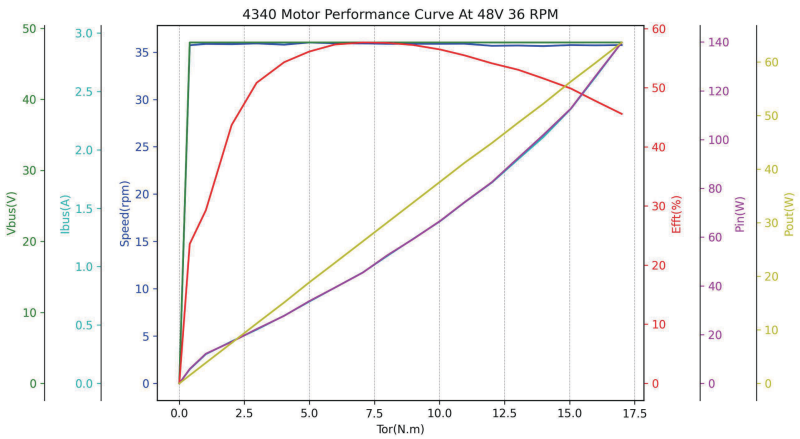

joint module A6006-2EC

module parameters	
供电电压 Supply Voltage(V)	24V (Support 24-48V)
额定相电流 Rated Phase Current(A)	5.96
峰值相电流Peak Phase Current(A)	17.6
额定扭矩 Rated Torque(Nm)	4
峰值扭矩 Peak Torque(Nm)	11
额定转速 Rated Speed(rpm)	150
空载转速 No-load Speed(rpm)	226@24V 408@48V
额定功率Rated Power(W)	62
减速比 Reduction Ratio	6
极对数 Pair of Poles	21
相间电感 Interphase inductance(uH)	270
相间电阻 Interphase resistance(Ω)	0.435
尺寸 直径*高度 Motor Size（mm）	76*36.5
重量 Weight（g）	335
编码器 Encoder	Magnetic Encoder / Dual Encoder
通信方式 Communication Mode)	CAN、CANFD

Dimensional Drawing

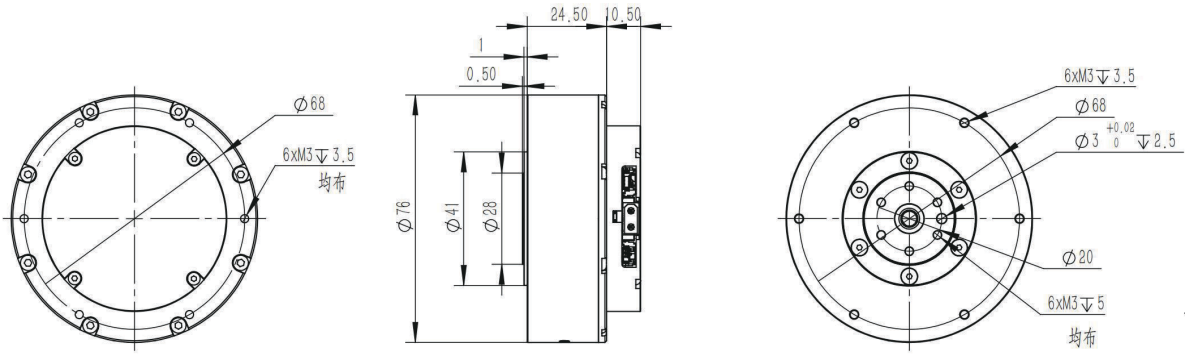

Performance curve

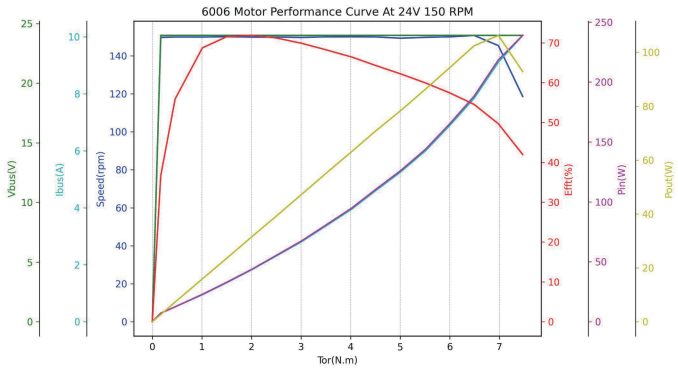

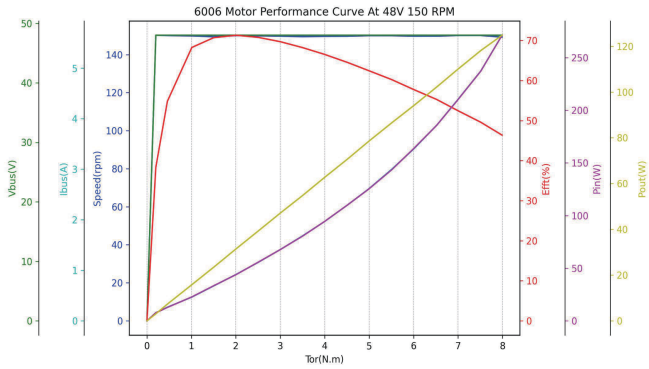

joint module A6248P-2EC

module parameters	
供电电压 Supply Voltage(V)	24V（Support24-48V）
额定相电流 Rated Phase Current(A)	11.3A/7A@24V; 11.3A/3.7A@48V;
峰值相电流Peak Phase Current(A)	38.7A/16A@24V; 38.7A/8A@48V;
额定扭矩 Rated Torque(Nm)	30
峰值扭矩 Peak Torque(Nm)	97
额定转速 Rated Speed(rpm)	40
空载转速 No-load Speed(rpm)	60
额定功率Rated Power(W)	125
减速比 Reduction Ratio	48
极对数 Pair of Poles	14
相间电感 Interphase inductance(uH)	85
相间电阻 Interphase resistance(Ω)	0.17
尺寸 直径*高度 Motor Size（mm）	76*62.5
重量 Weight（g）	628
编码器 Encoder	Magnetic Encoder / Dual Encoder
通信方式 Communication Mode)	CAN、CANFD

Dimensional Drawing

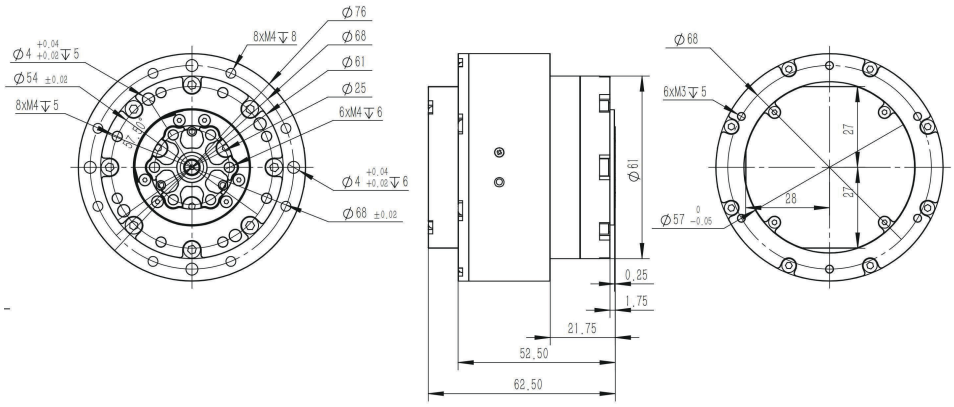

Performance curve

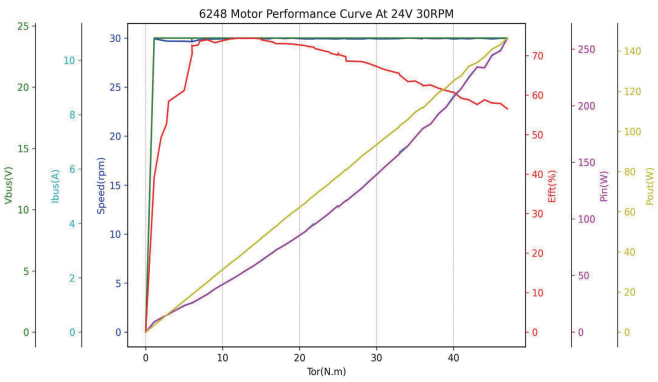

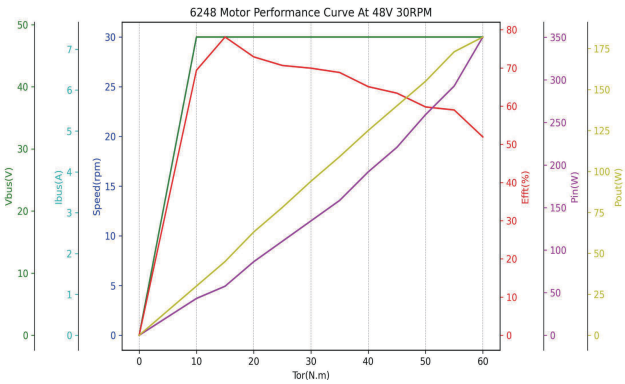

joint module A8006-2EC V1.1

module parameters	
供电电压 Supply Voltage(V)	24V（Support 24-48V）
额定相电流 Rated Phase Current(A)	9
峰值相电流Peak Phase Current(A)	21
额定扭矩 Rated Torque(Nm)	8
峰值扭矩 Peak Torque(Nm)	20
额定转速 Rated Speed(rpm)	120
空载转速 No-load Speed(rpm)	194.2@24V 392.8@48V
额定功率Rated Power(W)	100
减速比 Reduction Ratio	6
极对数 Pair of Poles	21
相间电感 Interphase inductance(uH)	215
相间电阻 Interphase resistance(Ω)	0.4
尺寸 直径*高度 Motor Size（mm）	96*40
重量 Weight（g）	559
编码器 Encoder	Magnetic Encoder / Dual Encoder
通信方式 Communication Mode)	CAN、CANFD

Motor parameters

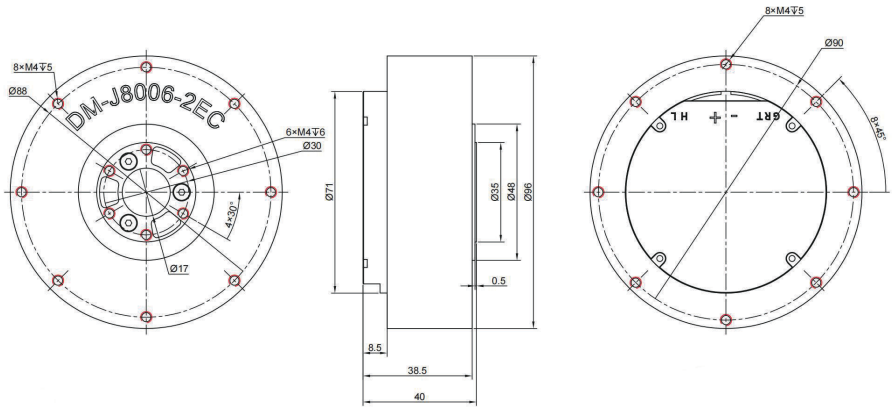

Performance curve

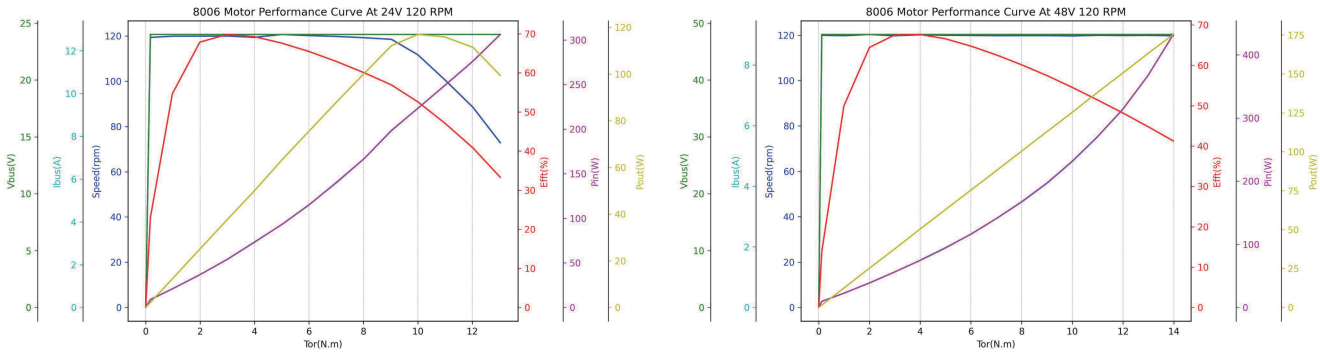

joint module A8009-2EC

module parameters	
供电电压 Supply Voltage(V)	24V（Support 24-48V）
额定相电流 Rated Phase Current(A)	18.6
峰值相电流Peak Phase Current(A)	40
额定扭矩 Rated Torque(Nm)	20
峰值扭矩 Peak Torque(Nm)	40
额定转速 Rated Speed(rpm)	100@24V 200@48V
空载转速 No-load Speed(rpm)	168@24V 335@48V
额定功率Rated Power(W)	209
减速比 Reduction Ratio	9
极对数 Pair of Poles	21
相间电感 Interphase inductance(uH)	80
相间电阻 Interphase resistance(Ω)	0.145
尺寸 直径*高度 Motor Size（mm）	98*61.7
重量 Weight（g）	896
编码器 Encoder	Magnetic Encoder / Dual Encoder
通信方式 Communication Mode)	CAN、CANFD

Dimensional Drawing

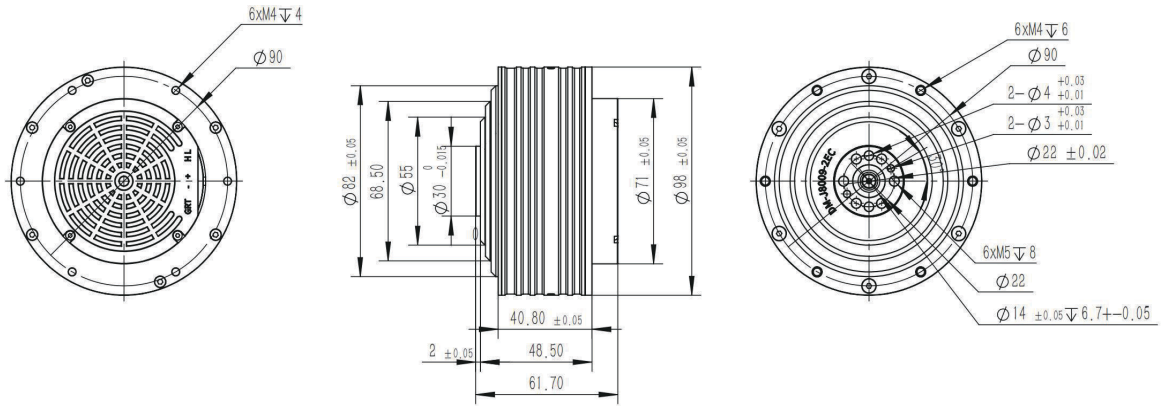

Performance curve

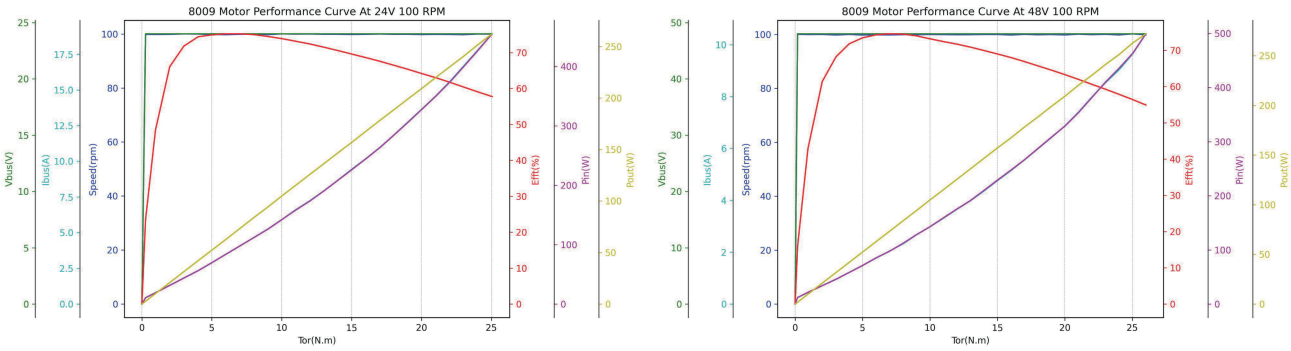

joint module A8009P-2EC

module parameters	
供电电压 Supply Voltage(V)	24V（Support 24-48V）
额定相电流 Rated Phase Current(A)	18.6
峰值相电流Peak Phase Current(A)	40
额定扭矩 Rated Torque(Nm)	20
峰值扭矩 Peak Torque(Nm)	40
额定转速 Rated Speed(rpm)	100@24V 200@48V
空载转速 No-load Speed(rpm)	168@24V 335@48V
额定功率Rated Power(W)	209
减速比 Reduction Ratio	9
极对数 Pair of Poles	21
相间电感 Interphase inductance(uH)	80
相间电阻 Interphase resistance(Ω)	0.145
尺寸 直径*高度 Motor Size（mm）	98*61.7
重量 Weight（g）	921
编码器 Encoder	Magnetic Encoder / Dual Encoder
通信方式 Communication Mode)	CAN、CANFD

Dimensional Drawing

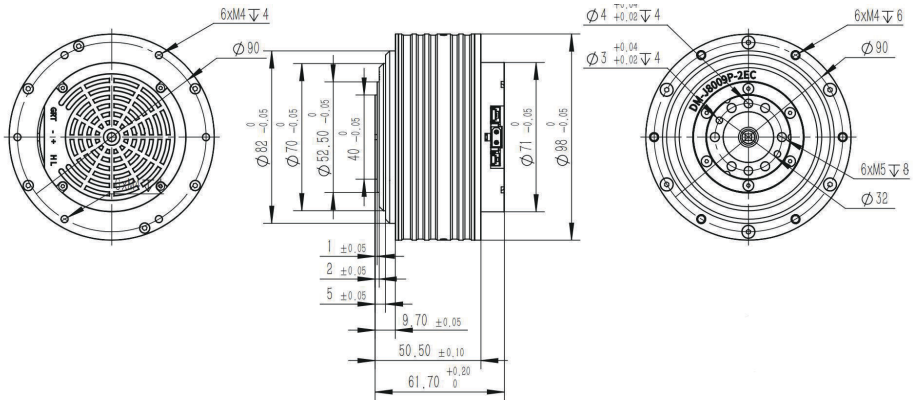

Performance curve

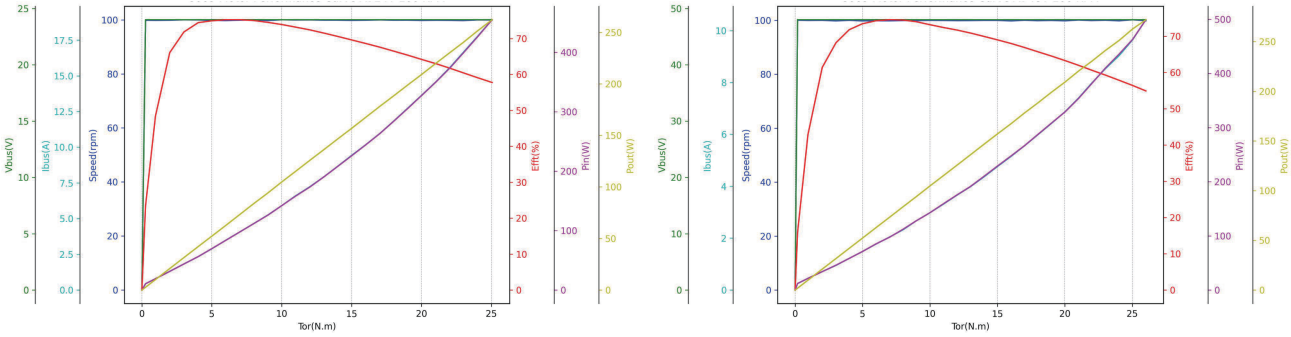

joint module A10010-2EC

module parameters	
供电电压 Supply Voltage(V)	24V（Support 24-48V）
额定相电流 Rated Phase Current(A)	18.4
峰值相电流Peak Phase Current(A)	80.2
额定扭矩 Rated Torque(Nm)	40
峰值扭矩 Peak Torque(Nm)	150
额定转速 Rated Speed(rpm)	50@24V 100@48V
空载转速 No-load Speed(rpm)	75@24V 150@48V
额定功率Rated Power(W)	418
减速比 Reduction Ratio	10
极对数 Pair of Poles	21
相间电感 Interphase inductance(uH)	100
相间电阻 Interphase resistance(Ω)	0.125
尺寸 直径*高度 Motor Size（mm）	112*62 (Maximum outline 120)
重量 Weight（g）	1485
编码器 Encoder	Magnetic Encoder / Dual Encoder
通信方式 Communication Mode)	CAN、CANFD

Dimensional Drawing

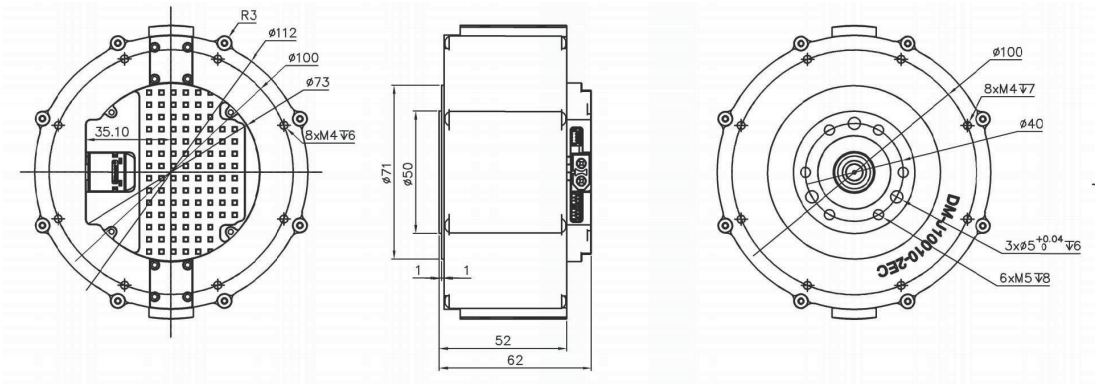

Performance curve

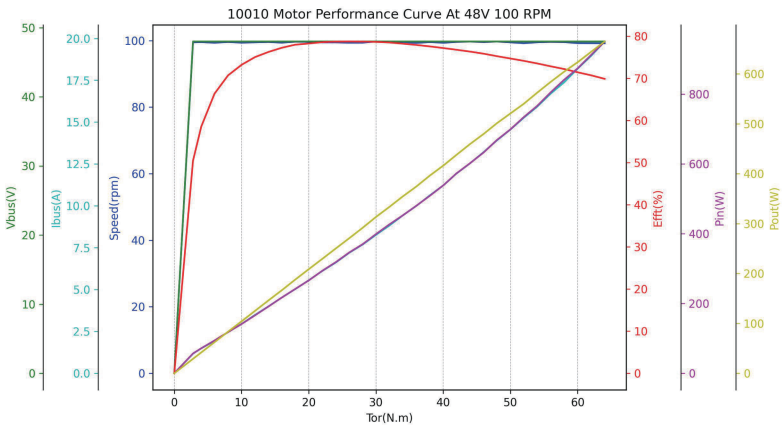

joint module A10010L-2EC

Motor parameters	
供电电压 Supply Voltage(V)	24V（Support 24-48V）
额定相电流 Rated Phase Current(A)	23.5
峰值相电流Peak Phase Current(A)	95
额定扭矩 Rated Torque(Nm)	40
峰值扭矩 Peak Torque(Nm)	120
额定转速 Rated Speed(rpm)	70@24V 100@48V
空载转速 No-load Speed(rpm)	100@24V 200@48V
额定功率Rated Power(W)	418
减速比 Reduction Ratio	10
极对数 Pair of Poles	21
相间电感 Interphase inductance(uH)	85
相间电阻 Interphase resistance(Ω)	0.11
尺寸 直径*高度 Motor Size（mm）	120*53 Height without positioning pins
重量 Weight（g）	1375
编码器 Encoder	Magnetic Encoder / Dual Encoder
通信方式 Communication Mode)	CAN、CANFD

Dimensional Drawing

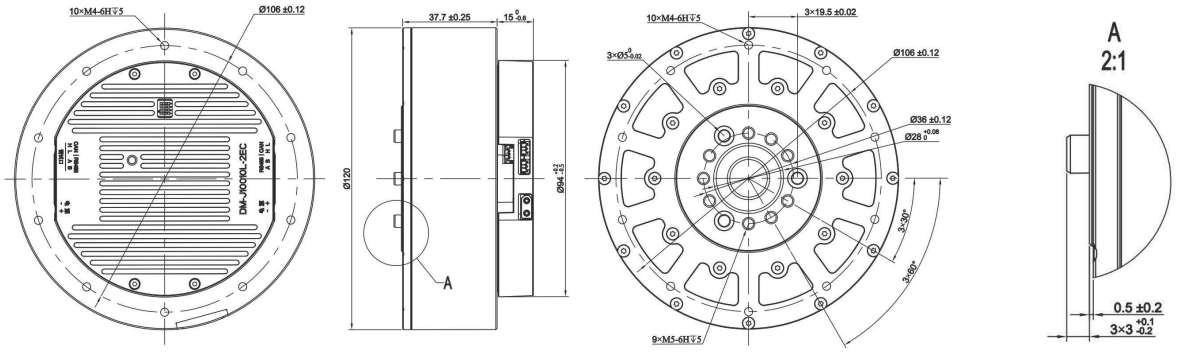

Performance curve

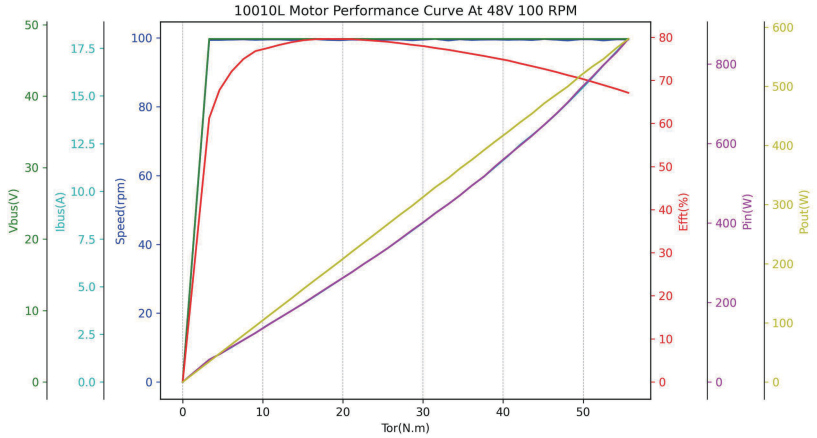

Domestic Station

International Station

ShenZhen Mosrac Motor Co., Ltd

Sales Line：86-18924671145

Technical Support：86-18675590097

Mail： Sales15@mosrac.com

Website：https://www.mosrac.com

Address: Building B7, Block B, Zhangtou Road, Songgang Street, Bao'an District, Shenzhen, Guangdong, China