保密

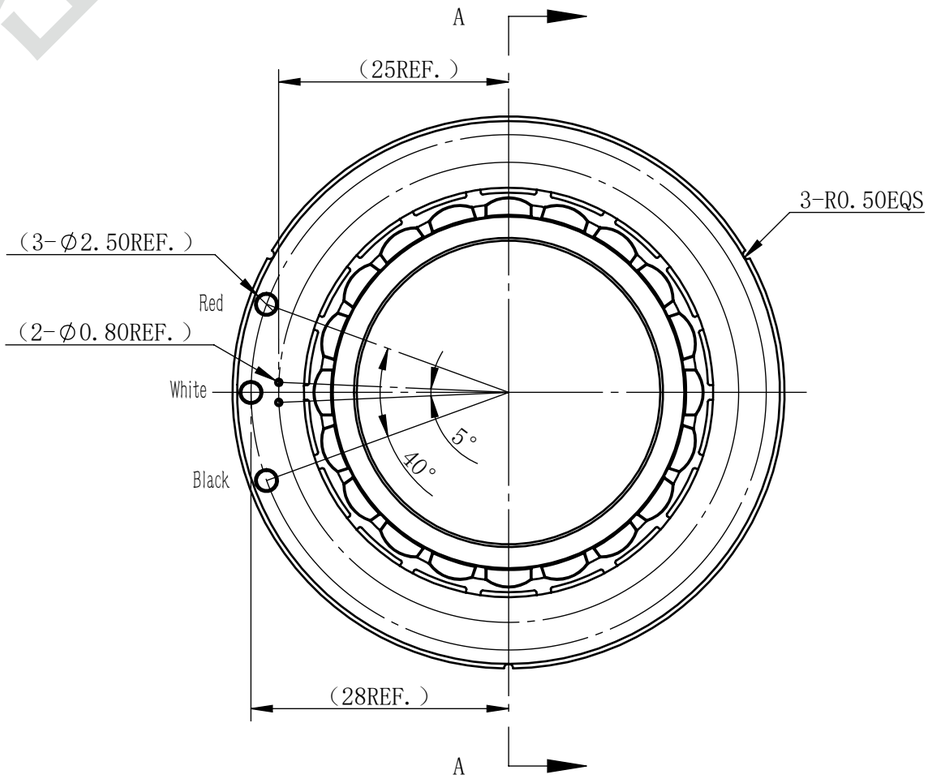

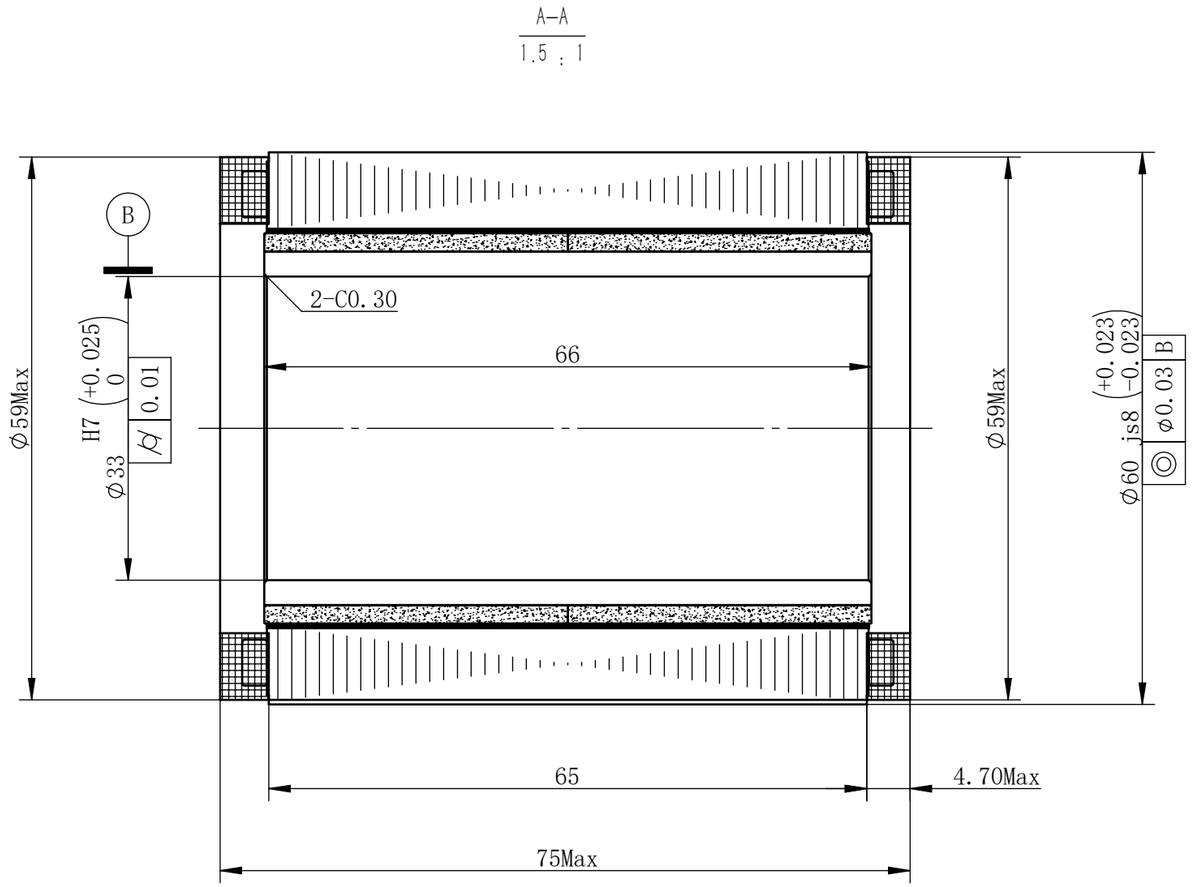

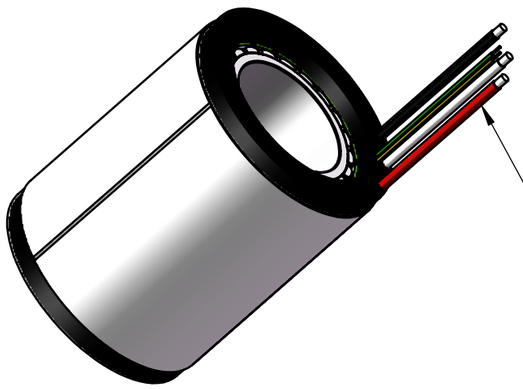

Wire: #14AWG red,black,white,corresponding to U, V, W
Wire length 250mm
Temperature control wire: #26AWG, yellow and green wires,
length: 250mm
Temperature Coefficient Thermistor: CA-NTC24C018

Model	U6075
DC voltage (VDC)	48
Rated output (W)	784.5
Rated torque (N.m)	2.5
Rated current (A)	23
Rated speed (rpm)	3000
Maximum speed (rpm)	4500
Instant max torque (N.m)	7.5
Instant max current (A)	69
Coil resistance (ohms@20℃)	0.07
Coil inductance (mH)	0.1
Torque parameters (Nm/A)	0.108
Back EMF coefficient (Vrms/KRPM)	6.5
Number of pole-pairs (2P)	10
Rotor inertia (Kg.cm2)	0.852
Winding connection way	Y

									MOSRAC强和电机
						Drawing Sign	Version	V1.0	U6075 Frameless Torque Motor
Marker	Place number	Drawing Zone	Rev.No.	Signature	Month-Day-Year		Weight		WI-YF-U6075DJA01
Designer	ZZY	2025/12/18	Unification				Scale		MOSRAC Motor R&D Department
Checker			Process Engineer						Perspective
Technical	CMH	2025/12/18	Approval			Sheet 1 of 1			