U32 series

Frameless Torque Motor

MAIN PARAMETERS		U3212
Voltage(VDC)		48
Rated Output (W)		36.7
Rated torque (Nm)		0. 07
Instant Max Torque (Nm)		0.21
Rated Current (Arms)		2.30
Instant Max Current (Arms)		7
Rated Speed (rpm)		5000
Max Speed (rpm)		7000
Torque constant (Nm/Arms)		0.03
Rotor inertia 10^{-4} kg.m²		0.085
Back EMF coefficient(V/Krpm)		4.00
Resistance (Ω)		2.60
Inductance (mH)		0.70
Pole-pairs number (2P)		7
Weight (kg)		0.05
Motor height L(mm)	L1	7
	L2	9
	L3	12.7

Specification & drawing

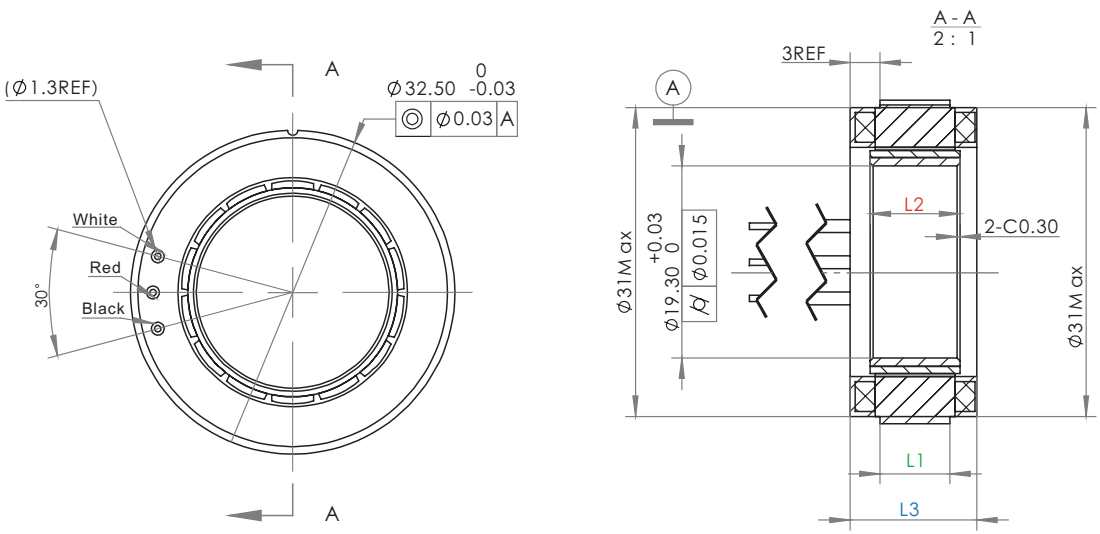

Copyright @ MOSRAC ©Motor 24-hour technical support: sales12@mosrac.com Website: www.mosrac.com